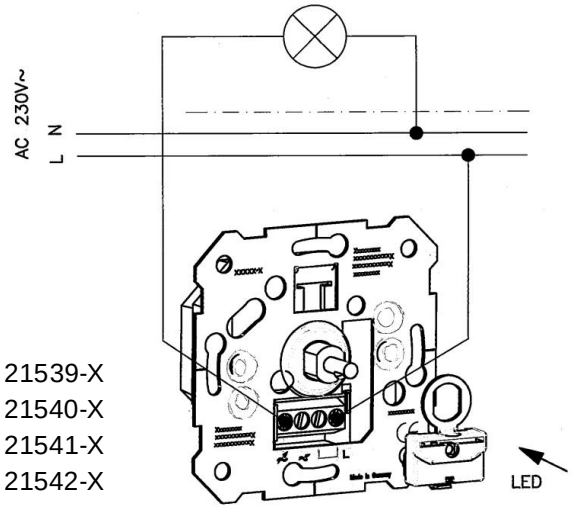

21539-X
21540-X
21541-X
21542-X

18039-5AZ

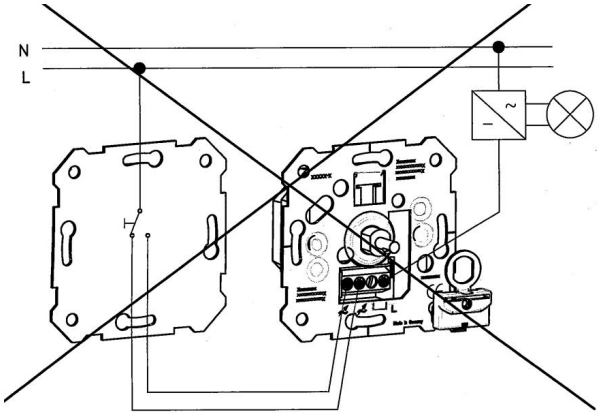

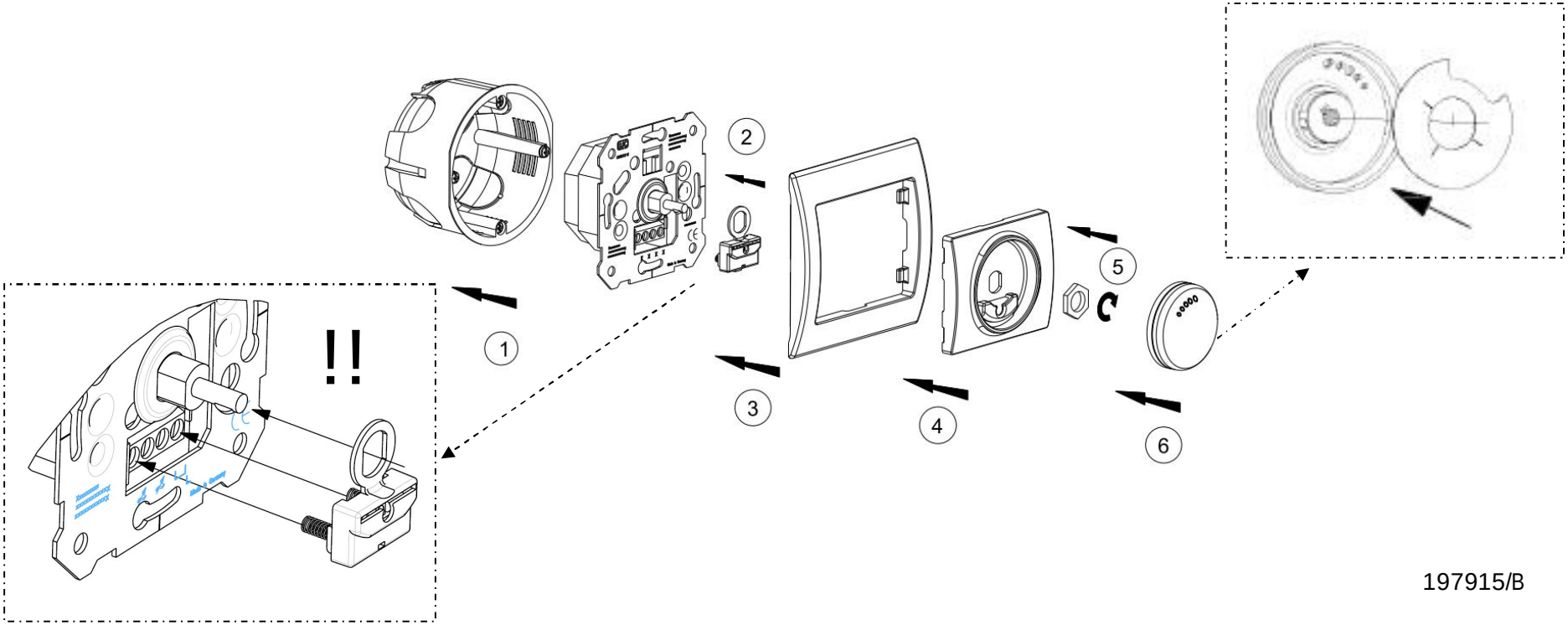

197915/B